Your Peace of Mind is Our Top Priority®

Product information presented here reflects conditions at time of publication. Consult factory regarding discrepancies or inconsistencies.

ZOELLER®
PUMP COMPANY
Zoeller Family of Water Solutions™

MAIL TO: P.O. BOX 16347 • Louisville, KY 40256-0347
SHIP TO: 3649 Cane Run Road • Louisville, KY 40211-1961
(502) 778-2731 • 1 (800) 928-PUMP • FAX (502) 774-3624

SECTION: 2.20.050
FM0460
0414
Supersedes
1212

visit our web site: www.zoeller.com

COMPARE THESE FEATURES

- Non-clogging bronze vortex impeller design
- Durable cast construction. Cast iron switch case, base, motor and pump housing
- Castings - Cast iron class 30 (30,000# tensile strength). Impeller, bronze class C89833
- Corrosion-resistant powder coated epoxy finish
- 20 ft. UL Listed 3-wire neoprene cord and plug. Longer cords available in lengths of 25-35-50 feet.
- Motor - 60 Hz, 3450 RPM, oil-filled, hermetically sealed, automatic reset thermal overload protection (1 Ph only).
- Upper & lower ball bearings running in bath of oil.
- Carbon and ceramic shaft seal
- Maximum temperature for effluent or dewatering, 130°F - 54°C (ED 140°F - 60°C).
- Major width 12¾" Height 19$^{5}/_{16}$" (Single seal pumps)
- No screens to clog.
- Square Ring & Gasket - Neoprene
- Stainless steel screws, bolts, float rod, handle guard, arm and seal assembly
- Passes ¾" spherical solids
- 1½" NPT discharge with 2" or 3" flange available
- Automatic units available with float operated, submersible (NEMA 6) 2-pole mechanical switch. On point 14¾" - Off point 5"
- Available in single or double seal designs.
- 100% of units are computerized tested.

MODELS 4161-4163-4165 DOUBLE SEAL PUMPS (Nonauto only)

- Protects motor from seal leaks
- Improved bearing lubrication
- Helps eliminate seal and bearing damage from dry runs
- Major width 12¾" Height 21$^{3}/_{16}$"

Note: The sizing of effluent systems normally requires variable level float(s) controls and properly sized basins to achieve required pumping cycles or dosing timers with nonautomatic pumps.

AUTOMATIC UNITS NOT RECOMMENDED FOR USE IN EFFLUENT SYSTEMS.

161 - 163 - 165 Single Seal Series
4161 - 4163 - 4165 Double Seal Series

(For Pump Prefix Identification see News & Views 0052)

Tested to UL Standard UL778 *

Certified to CSA Standard C22.2 No 108 *

HIGH HEAD
"FLOW-MATE"

FOR SEPTIC TANK • LOW PRESSURE PIPE (LPP) AND ENHANCED FLOW STEP SYSTEMS

EFFLUENT

OR DEWATERING PUMP • SUBMERSIBLE
1½" NPT DISCHARGE STANDARD • 2" AND 3" NPT FLANGE AVAILABLE

SSPMA Certified PUMP MEMBER®

SINGLE SEAL PUMP

DOUBLE SEAL PUMP

POWDER COATED TOUGH™

MODELS AVAILABLE

• Automatic (Single Seal Only) or Nonautomatic

161-163 and 4161-4163 Series
- ½ HP, 1 Ph, 115V, 200-208V or 230V
- ½ HP, 3 Ph, 200-208V, 230V, 460V or 575V

165 and 4165 Series
- 1 HP, 1 Ph, 200-208V or 230V
- 1 HP, 3 Ph, 200-208, 230V, 460V or 575V

* NOTE: No UL listing or approval for 200-208V 1Ph or Extra Duty (ED) pumps. See back page for UL & CSA Listings.

© Copyright 2014 Zoeller Co. All rights reserved.

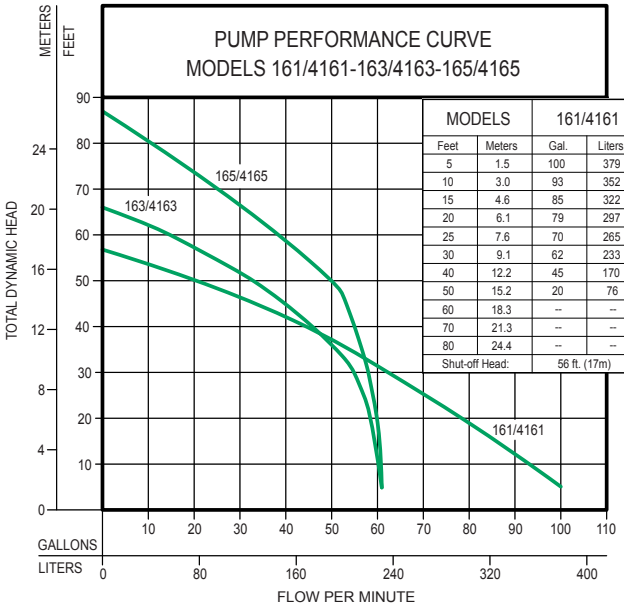

MODELS		161/4161		163/4163		165/4165	
Feet	Meters	Gal.	Liters	Gal.	Liters	Gal.	Liters
5	1.5	100	379	61	231	61	231
10	3.0	93	352	61	231	61	231
15	4.6	85	322	60	227	61	231
20	6.1	79	297	59	223	60	227
25	7.6	70	265	57	216	59	223
30	9.1	62	233	55	206	58	220
40	12.2	45	170	46	172	55	208
50	15.2	20	76	33	125	50	189
60	18.3	--	--	15	57	39	148
70	21.3	--	--	--	--	23	87
80	24.4	--	--	--	--	10	38
Shut-off Head:		56 ft. (17m)		66 ft. (20m)		86.5 ft. (26m)	

Single Seal Automatic Design Weight 80 lbs.

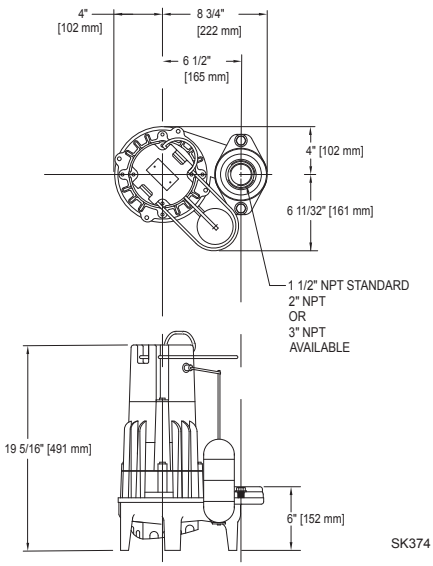

Double Seal Design Weight 87 lbs.

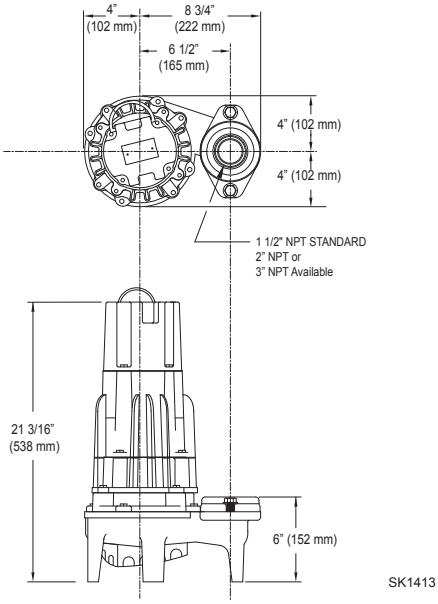

Standard all models - 20 ft. cord - ½ HP

161 MODELS	4161 MODELS	Control Selection						Listings	
Single Seal	Double Seal	Volts -	Ph	Mode	Amps	Simplex	Duplex	cCSAus	UL
M161	---------	115	1	Auto	15.5	1	---------	Y	Y
N161	N4161	115	1	Non	15.5	2 or 3 & 5	4 & 5	Y	Y[1]
D161	---------	230	1	Auto	7.5	1	---------	Y	Y
E161	E4161	230	1	Non	7.5	2 or 3 & 5	4 & 5	Y	Y
* H161	---------	200-208	1	Auto	8.8	1	---------	Y	N
* I161	* I4161	200-208	1	Non	8.8	2 or 3 & 5	4 & 5	Y	N
* J161	* J4161	200-208	3	Non	6.4	3 & 5	4 & 5	Y	Y
* F161	* F4161	230	3	Non	5.2	3 & 5	4 & 5	Y	Y
* G161	* G4161	460	3	Non	2.9	3 & 5	4 & 5	Y	Y
* BA161	* BA4161	575	3	Non	2.4	3 & 5	4 & 5	Y	N

Standard all models - 20 ft. cord - ½ HP

163 MODELS	4163 MODELS	Control Selection						Listings	
Single Seal	Double Seal	Volts -	Ph	Mode	Amps	Simplex	Duplex	cCSAus	UL
M163	---------	115	1	Auto	15.0	1	---------	Y	Y
N163	N4163	115	1	Non	15.0	2 or 3 & 5	4 & 5	Y	Y[1]
D163	---------	230	1	Auto	7.5	1	---------	Y	Y
E163	E4163	230	1	Non	7.5	2 or 3 & 5	4 & 5	Y	Y
* H163	---------	200-208	1	Auto	8.5	1	---------	Y	N
* I163	* I4163	200-208	1	Non	8.5	2 or 3 & 5	4 & 5	Y	N
* J163	* J4163	200-208	3	Non	6.0	3 & 5	4 & 5	Y	Y
* F163	* F4163	230	3	Non	4.8	3 & 5	4 & 5	Y	Y
* G163	* G4163	460	3	Non	2.9	3 & 5	4 & 5	Y	Y
* BA163	* BA4163	575	3	Non	2.4	3 & 5	4 & 5	Y	N

Standard all models - 20 ft. cord - 1 HP

165 MODELS	4165 MODELS	Control Selection						Listings	
Single Seal	Double Seal	Volts -	Ph	Mode	Amps	Simplex	Duplex	cCSAus	UL
D165	---------	230	1	Auto	10.2	1	---------	Y	Y
E165	E4165	230	1	Non	10.2	2 or 3 & 5	4 & 5	Y	Y
* H165	---------	200-208	1	Auto	12.6	1	---------	Y	N
* I165	* I4165	200-208	1	Non	12.6	2 or 3 & 5	4 & 5	Y	N
* J165	* J4165	200-208	3	Non	7.5	3 & 5	4 & 5	Y	Y
* F165	* F4165	230	3	Non	7.4	3 & 5	4 & 5	Y	Y
* G165	* G4165	460	3	Non	3.7	3 & 5	4 & 5	Y	Y
* BA165	* BA4165	575	3	Non	3.0	3 & 5	4 & 5	Y	N

* No Molded Plug

[1] UL Listed unit available with 20 Amp plug.

For information on additional Zoeller products refer to catalog on Piggyback Variable Level Float Switches, FM0477; Electrical Alternator, FM0486; Mechanical Alternator, FM0495; Alarm Package, FM0732; and Sump/Sewage Basins, FM0487.

SELECTION GUIDE

1. Integral float operated mechanical switch, no external control required.
2. For automatic use single piggyback variable level float switch or double piggyback variable level float switch. Refer to FM0477.
3. See FM1228 for correct model of simplex control panel.
4. See FM0712 for correct model of duplex control panel.
5. Variable level control switch 10-0743 used as control activator, specify simplex (3) float or duplex (3) or (4) float system. (Refer to FM0526)

⚠ CAUTION

All installation of controls, protection devices and wiring should be done by a qualified licensed electrician. All electrical and safety codes should be followed including the most recent National Electric Code (NEC) and the Occupational Safety and Health Act (OSHA).

RESERVE POWERED DESIGN

For unusual conditions a reserve safety factor is engineered into the design of every Zoeller pump.

© Copyright 2014 Zoeller Co. All rights reserved.